Handle-O-Meter

rycobelgroup Nijverheidslaan 47 B-8540 Deerlijk Tel. +32(0)56.78.21.70 Fax +32(0)56.77.30.40 info@rycobel.be www.rycobel.be

Handle-O-Meter

The Handle-O-Meter measures “hand” which is the combined effect of surface friction and flexibility of sheeted materials.

rycobelgroup Nijverheidslaan 47 B-8540 Deerlijk Tel. +32(0)56.78.21.70 Fax +32(0)56.77.30.40 info@rycobel.be www.rycobel.be

Handle-O-Meter

Features

- Stores individual test results
- Automatically calculates statistical analysis including averaging, standard deviation and the high & low readings of a series of tests.
- Auto-zero
- RS-232 Output & Serial Port

rycobelgroup Nijverheidslaan 47 B-8540 Deerlijk Tel. +32(0)56.78.21.70 Fax +32(0)56.77.30.40 info@rycobel.be www.rycobel.be

Handle-O-Meter

Accessories

- Curved plates - can be supplied for testing paper towels in accordance with US Federal Specifications.
- Teflon coated plates - are used primarily with plastic film to reduce static friction.
- Serial Printer - provides a formatted report on demand, showing test results and a statistical analysis for a group of tests.
- Chart Recorder

rycobelgroup Nijverheidslaan 47 B-8540 Deerlijk Tel. +32(0)56.78.21.70 Fax +32(0)56.77.30.40 info@rycobel.be www.rycobel.be

Handle-O-Meter

Tests a wide range of materials:

- Tissue
- Toweling
- Film
- Nonwovens
- Textiles

rycobelgroup Nijverheidslaan 47 B-8540 Deerlijk Tel. +32(0)56.78.21.70 Fax +32(0)56.77.30.40 info@rycobel.be www.rycobel.be

Handle-O-Meter

Test Procedure

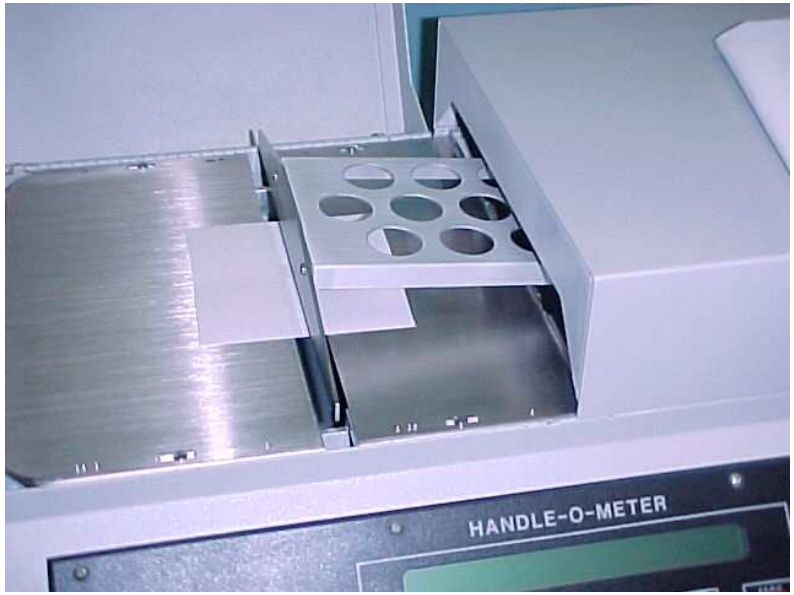

- Place sample on instrument platform, centered over the slot under the beam.
  - Pushing test activates the movement of the beam and bends the sample between the slot opening.
  - When the test cycle is completed, the maximum resistance force the beam encountered while pushing the sample through the slot is displayed.

rycobelgroup Nijverheidslaan 47 B-8540 Deerlijk Tel. +32(0)56.78.21.70 Fax +32(0)56.77.30.40 info@rycobel.be www.rycobel.be

Handle-O-Meter

Test Procedure

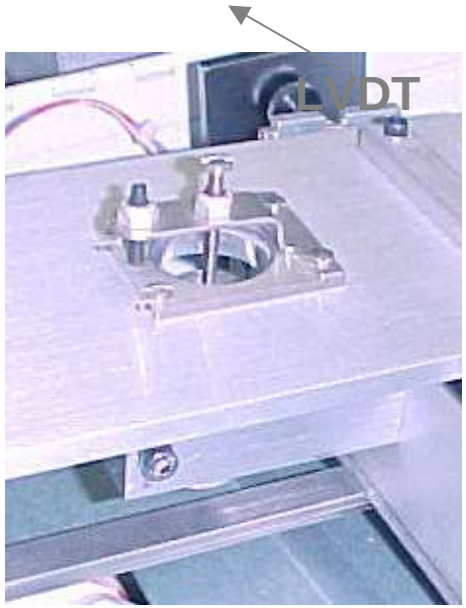

The Linear Variable Differential Transformer (LVDT) in conjunction with a torsion bar, measures the resistance encountered by the penetrator blade as it moves into the slot.

- Stiff materials offer greater resistance to the motion of the beam as it moves into the slot.
- Rough materials also exert resistance as they are dragged over the edge of the slot.

rycobelgroup Nijverheidslaan 47 B-8540 Deerlijk Tel. +32(0)56.78.21.70 Fax +32(0)56.77.30.40 info@rycobel.be www.rycobel.be

Handle-O-Meter

Test Procedure

Single, double & quadruple test modes:

For most materials, the Total Hand is considered to be the average of four readings taken on both sides and both directions of a test sample and is recorded in grams per standard width of sample material.

rycobelgroup Nijverheidslaan 47 B-8540 Deerlijk Tel. +32(0)56.78.21.70 Fax +32(0)56.77.30.40 info@rycobel.be www.rycobel.be

Handle-O-Meter

Interchangeable Beams

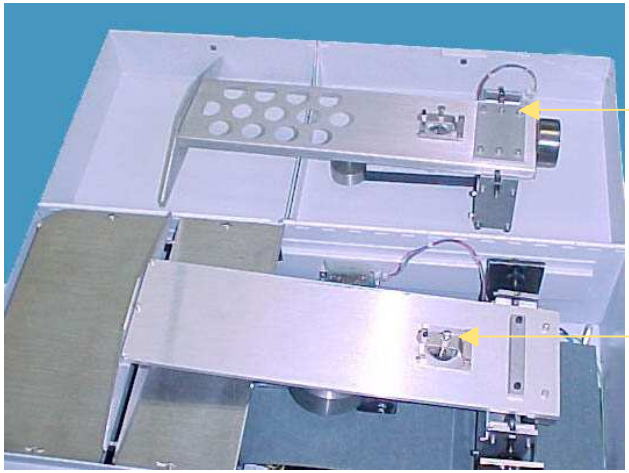

- **100 gm & 1000 gm beam** - Versatility in testing different materials. Displayed test results should be kept under 100 grams for the 100 gram beam and under 1000 grams for the 1000 gram beam.
- **Quickly change beams** - Wing nut fastening for rapid installation.
- **Auto Ranging** - Automatically detects the beam in use and adjusts the range and resolution.

rycobelgroup Nijverheidslaan 47 B-8540 Deerlijk Tel. +32(0)56.78.21.70 Fax +32(0)56.77.30.40 info@rycobel.be www.rycobel.be

Handle-O-Meter

Slot Width

Gage Blocks for setting slot opening

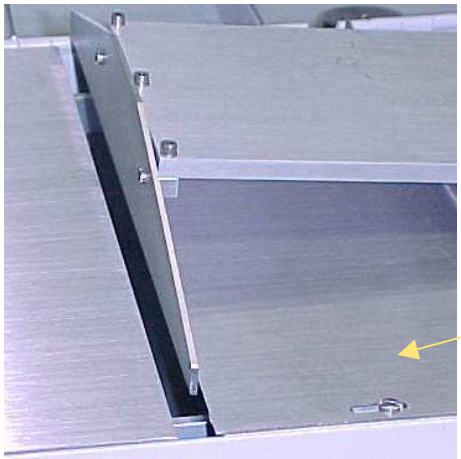

Quickly adjust slot opening with 4 preset slot widths

- **4 Pre-set slot widths** - 5 mm, 10 mm, 20 mm and 1/4 inch.
- **Broad range of materials** - The characteristics of the material being tested will determine the slot width that is to be used for testing.
- **Quickly change opening** - Gage blocks are provided to set the desired slot opening.

rycobelgroup Nijverheidslaan 47 B-8540 Deerlijk Tel. +32(0)56.78.21.70 Fax +32(0)56.77.30.40 info@rycobel.be www.rycobel.be

Handle-O-Meter

Sample Preparation

The Handle-O-Meter will accommodate square samples that are 203,3 mm x 203,2 mm. Several factors which should be considered in preparing and cutting a specimen from the material to be tested are as follows:

- **Direction of cutting -** The specimens should be cut in each of the principle directions of the sample of material to be tested.
- **Avoidance of creases and wrinkles -** Since creases and wrinkles affect readings, areas which contain creases and wrinkles should be avoided when preparing test samples.

rycobelgroup Nijverheidslaan 47 B-8540 Deerlijk Tel. +32(0)56.78.21.70 Fax +32(0)56.77.30.40 info@rycobel.be www.rycobel.be

Handle-O-Meter

Sample Testing

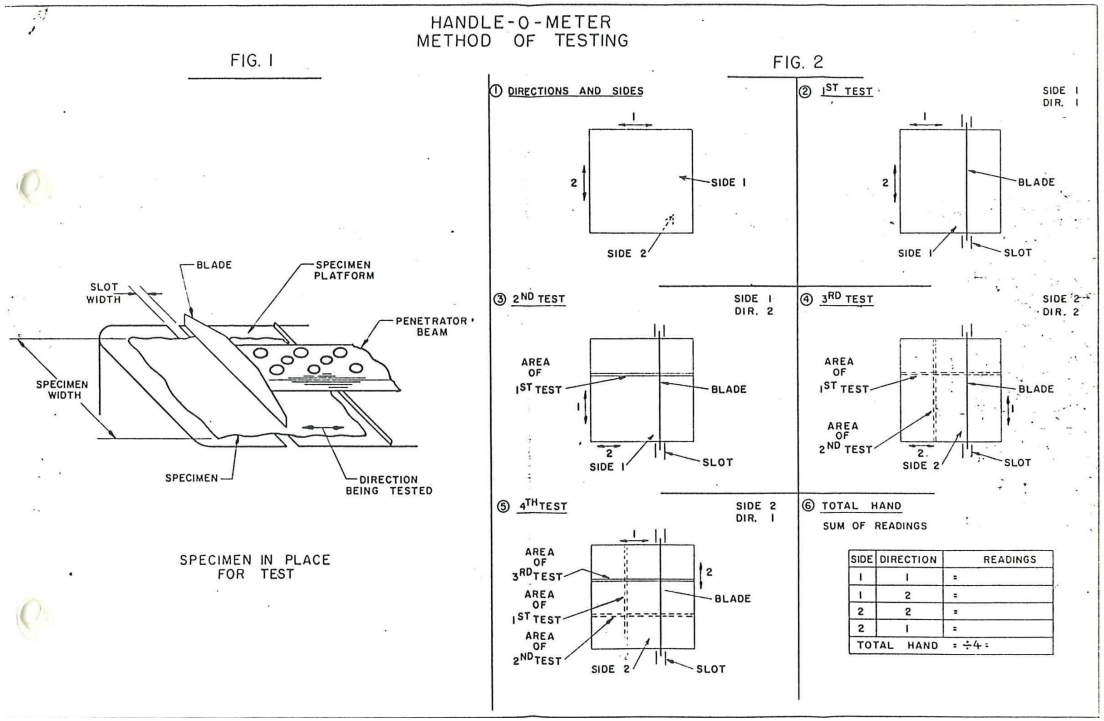

rycobelgroup Nijverheidslaan 47 B-8540 Deerlijk Tel. +32(0)56.78.21.70 Fax +32(0)56.77.30.40 info@rycobel.be www.rycobel.be

Handle-O-Meter

Sample Preparation

- **Direct ratio of Handle-O-Meter readings to specimen width -** It has been determined that there is a direct ratio between the width of a sample and the Handle-O-Meter readings.

  For example, a sample that is cut to a width of 203,1 mm will have an indicated test result that is twice that of a sample of the same material cut to 101,6 mm.

  Specimen widths should be maintained from one series of tests to the next so that comparable results will be derived. Sample should be at least 25,4 mm wide.

rycobelgroup Nijverheidslaan 47 B-8540 Deerlijk Tel. +32(0)56.78.21.70 Fax +32(0)56.77.30.40 info@rycobel.be www.rycobel.be

Handle-O-Meter

Industry Test Standards

- ASTM D2923
- TAPPI T498
- INDA IST 90.3 (95)
- JIS L-1096-1990

rycobelgroup Nijverheidslaan 47 B-8540 Deerlijk Tel. +32(0)56.78.21.70 Fax +32(0)56.77.30.40 info@rycobel.be www.rycobel.be

Handle-O-Meter

Standard Test Method

ASTM D 2923 - 95: Standard Test Method for Rigidity of Polyolefin Film and Sheeting

The rigidity of polyolefin web can affect its machinability, particularly on those packaging machines where a cut portion of a web is required to remain flat momentarily without being supported on all sides.

Teflon coated plates are required to overcome the spurious effects of static electricity and friction.

rycobelgroup Nijverheidslaan 47 B-8540 Deerlijk Tel. +32(0)56.78.21.70 Fax +32(0)56.77.30.40 info@rycobel.be www.rycobel.be

Handle-O-Meter

Standard Test Method

TAPPI T498 cm-85: Softness of Sanitary Tissues

This method is designed to measure the softness or handle of sanitary-type tissue.

rycobelgroup Nijverheidslaan 47 B-8540 Deerlijk Tel. +32(0)56.78.21.70 Fax +32(0)56.77.30.40 info@rycobel.be www.rycobel.be

Handle-O-Meter

Standard Test Method²

IST 90-3 (95): Standard Test Method for Handle-O-Meter Stiffness of Nonwoven Fabrics

This method coves the evaluation of the stiffness or “hand” of nonwovens. The quality of “hand” is considered to be the combination of resistance due to the surface friction and the flexural rigidity of a sheet material.

rycobelgroup Nijverheidslaan 47 B-8540 Deerlijk Tel. +32(0)56.78.21.70 Fax +32(0)56.77.30.40 info@rycobel.be www.rycobel.be